5. Schematic Diagrams

5-1 Top Level

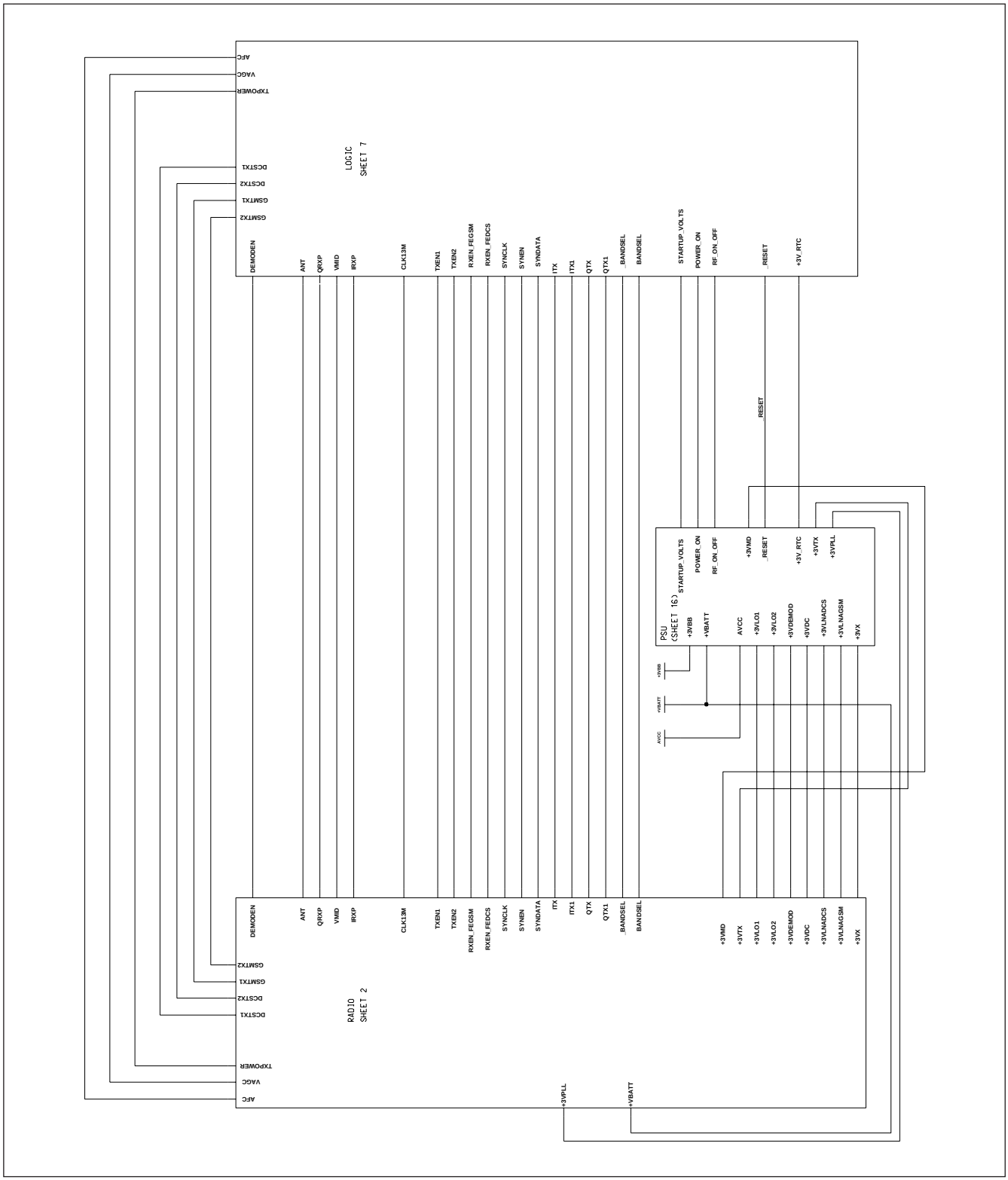

5-2 Radio

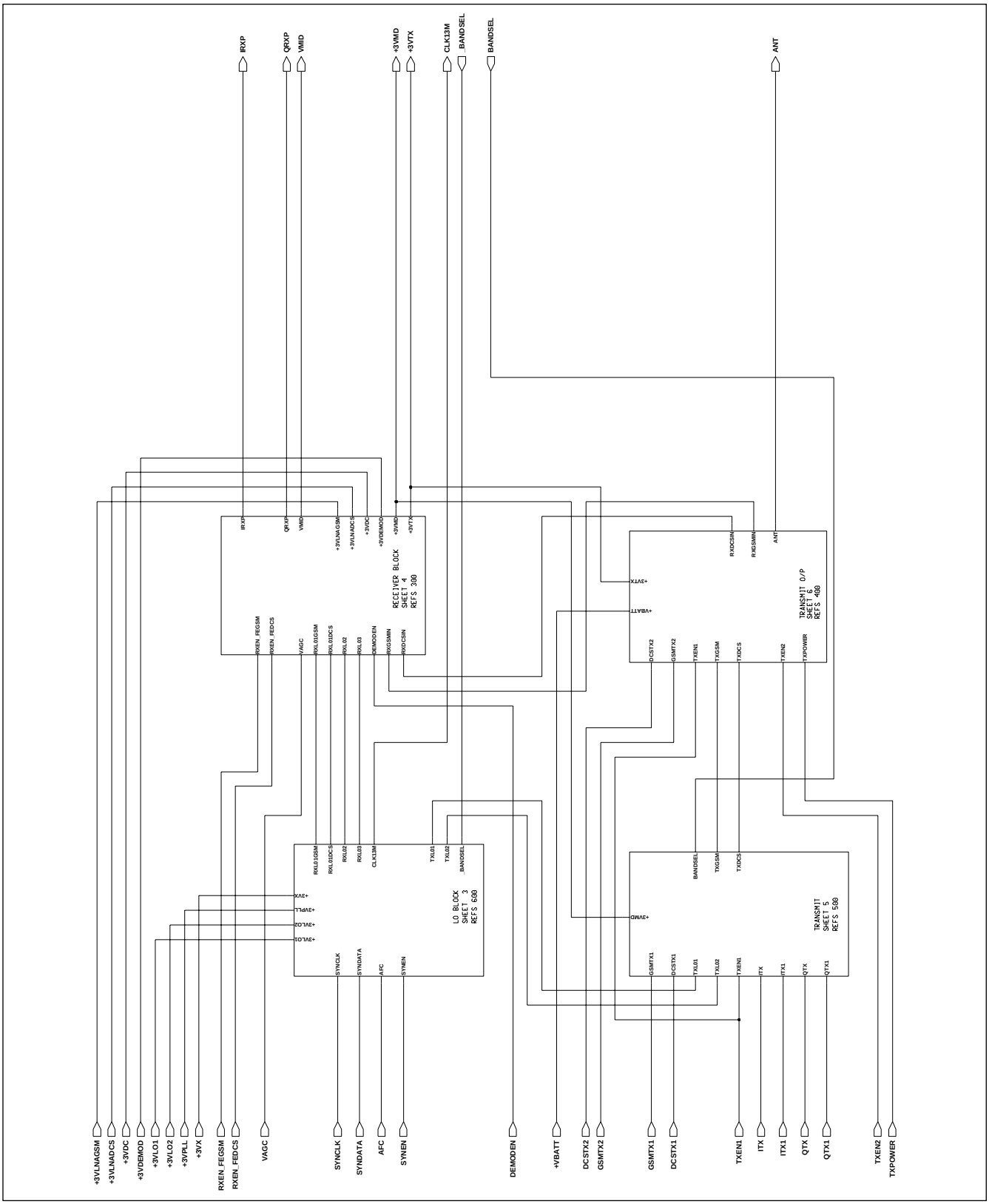
IRXP
QRXP
VMID
+3VMD
+3VTX
CLK13M
_BANDSEL
BANDSEL
ANT
RECEIVER BLOCK
SHEET 4
REFS 300
TRANSMIT O/P
SHEET 6
REFS 400
LO BLOCK
SHEET 3
REFS 600
TRANSMIT
SHEET 5
REFS 500
+3VLNAGSM
+3VLNADCS
+3VDC
+3VDEMOD
+3VLO1
+3VLO2
+3VPLL
+3VX
RXEN_FEGSM
RXEN_FEDCS
VAGC
SYNCLK
SYNDATA
AFC
SYNEN
DEMODEN
+VBATT
DCSTX2
GSMTX2
GSMTX1
DCSTX1
TXEN1
ITX
ITX1
QTX
QTX1
TXEN2
TXPOWER

5-3 Main VCO and Local

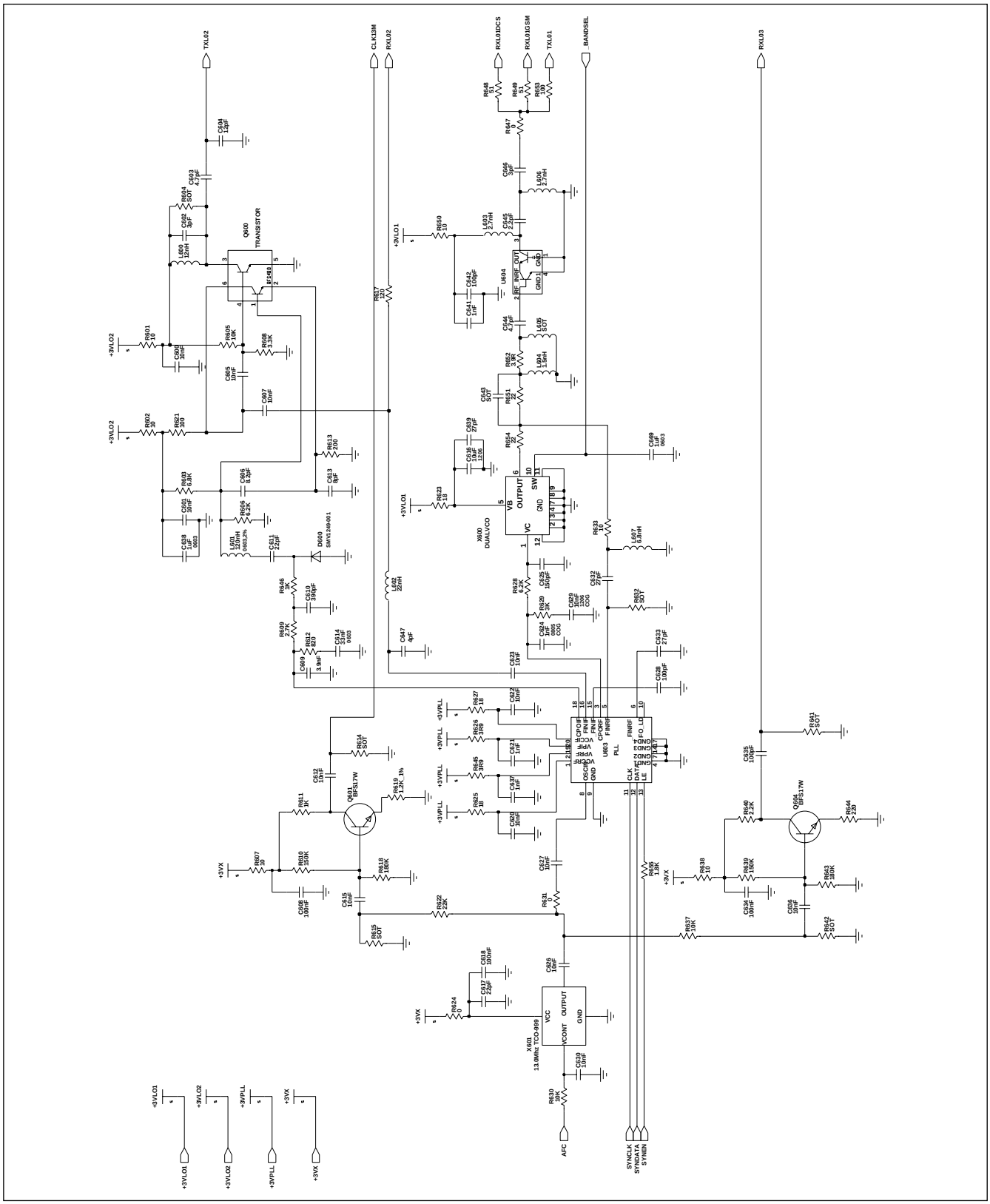

5-4 Receiver

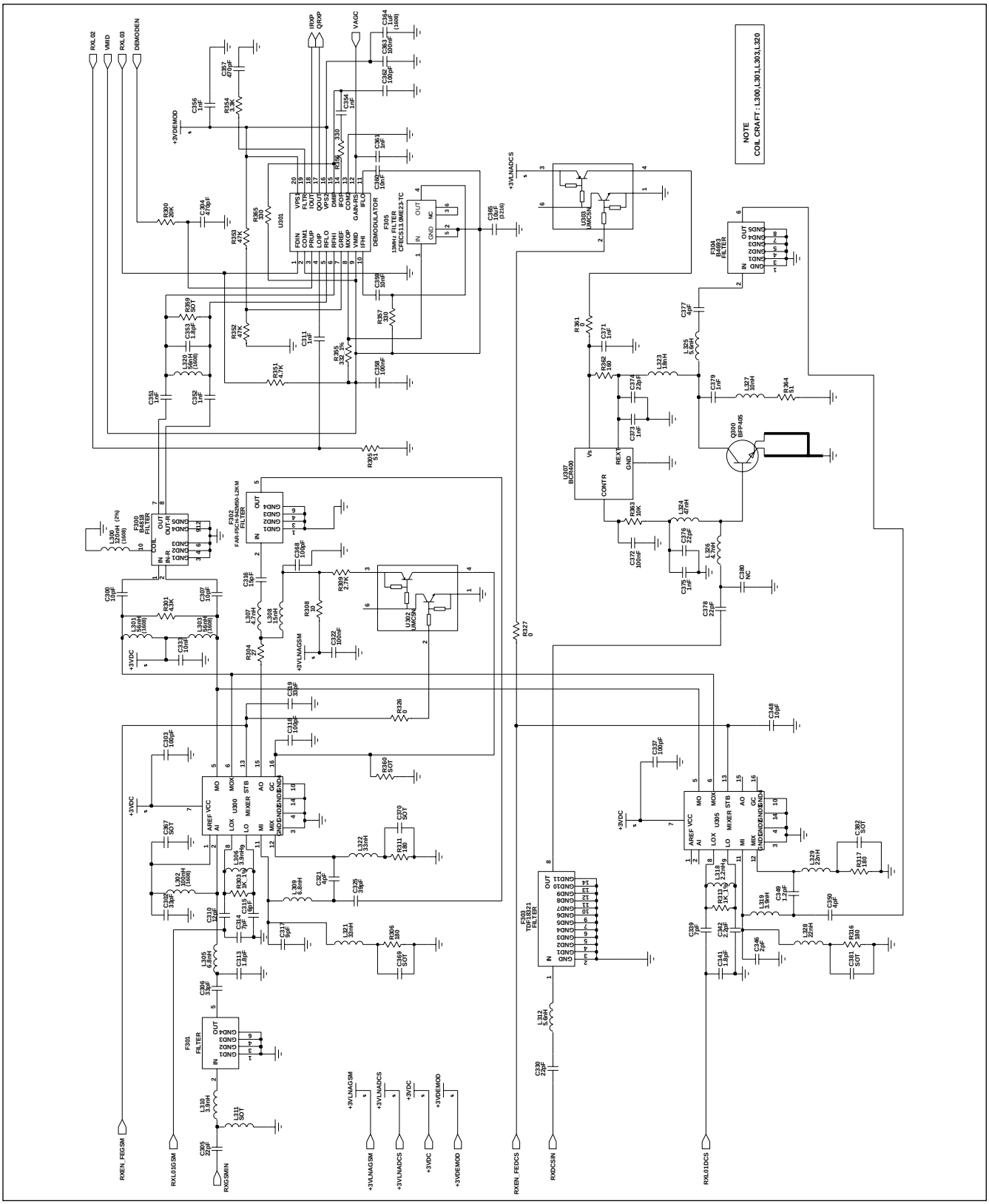
NOTE
COIL CRAFT : L300,L301,L303,L320
RXL02
VMID
RXL03
DEMODEN
IRXP
QRXP
VAGC
+3VDEMOD
+3VLNADCS
U301
DEMODULATOR
F305
13MHz FILTER
CFEC-S13.0ME23-TC
U103
UMC5N
F304
BPF FILTER
U107
BCR400
CONTR
Q100
BFP405
F300
F302
FAR-F6CA-942M50-L2K M
U302
UMC5N
+3VLNAGSM
+3VDC
U300
MIXER
U305
F303
TDF18321
FILTER
F301
FILTER
RXEN_FEGSM
RXL01GSM
RXGSMIN
+3VLNAGSM
+3VLNADCS
+3VDC
+3VDEMOD
RXEN_PEDCS
RXDCSIN
RXL01DCS

5-5 Modulator & Tx Vco

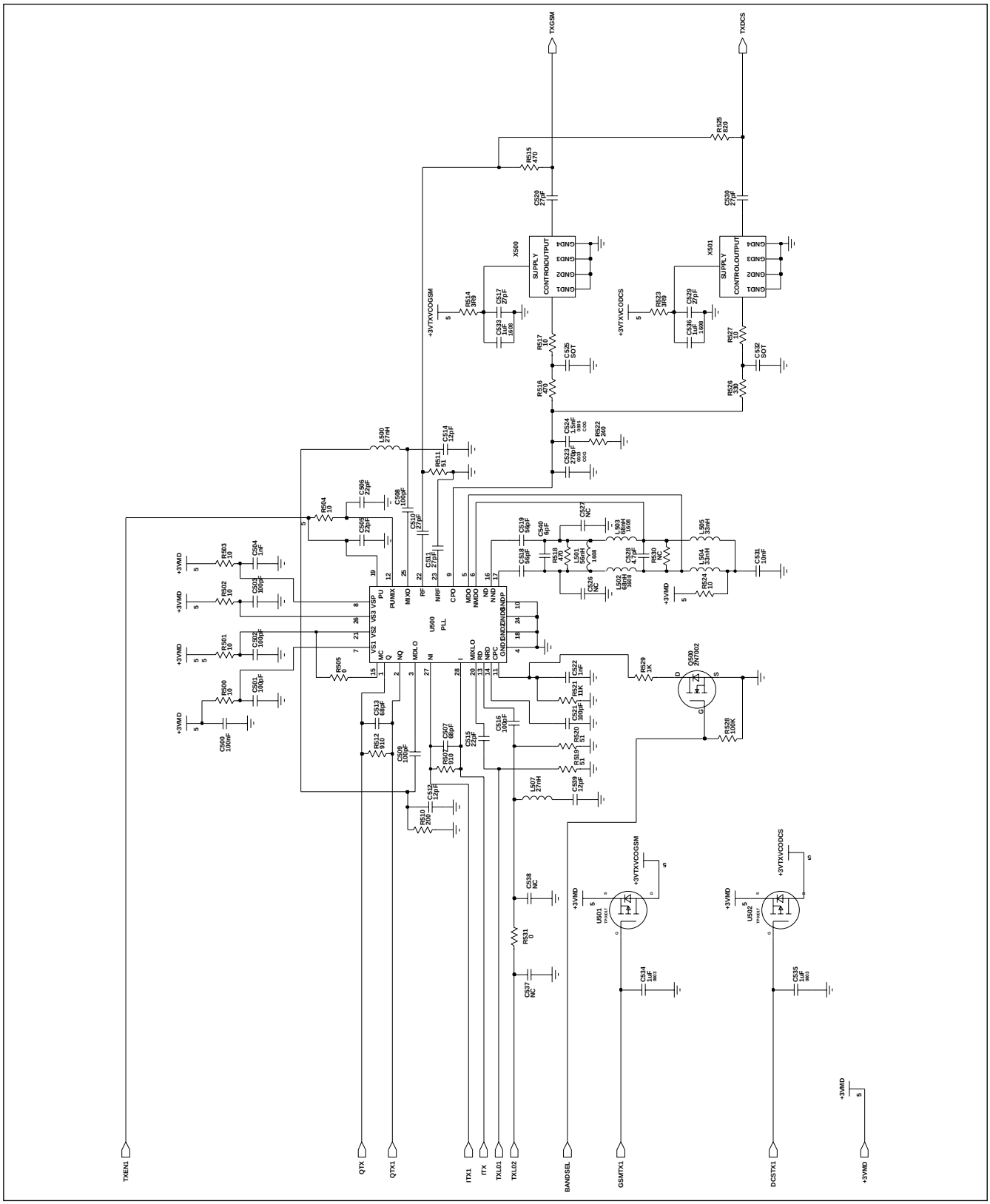

5-6 Transmit Output Stage

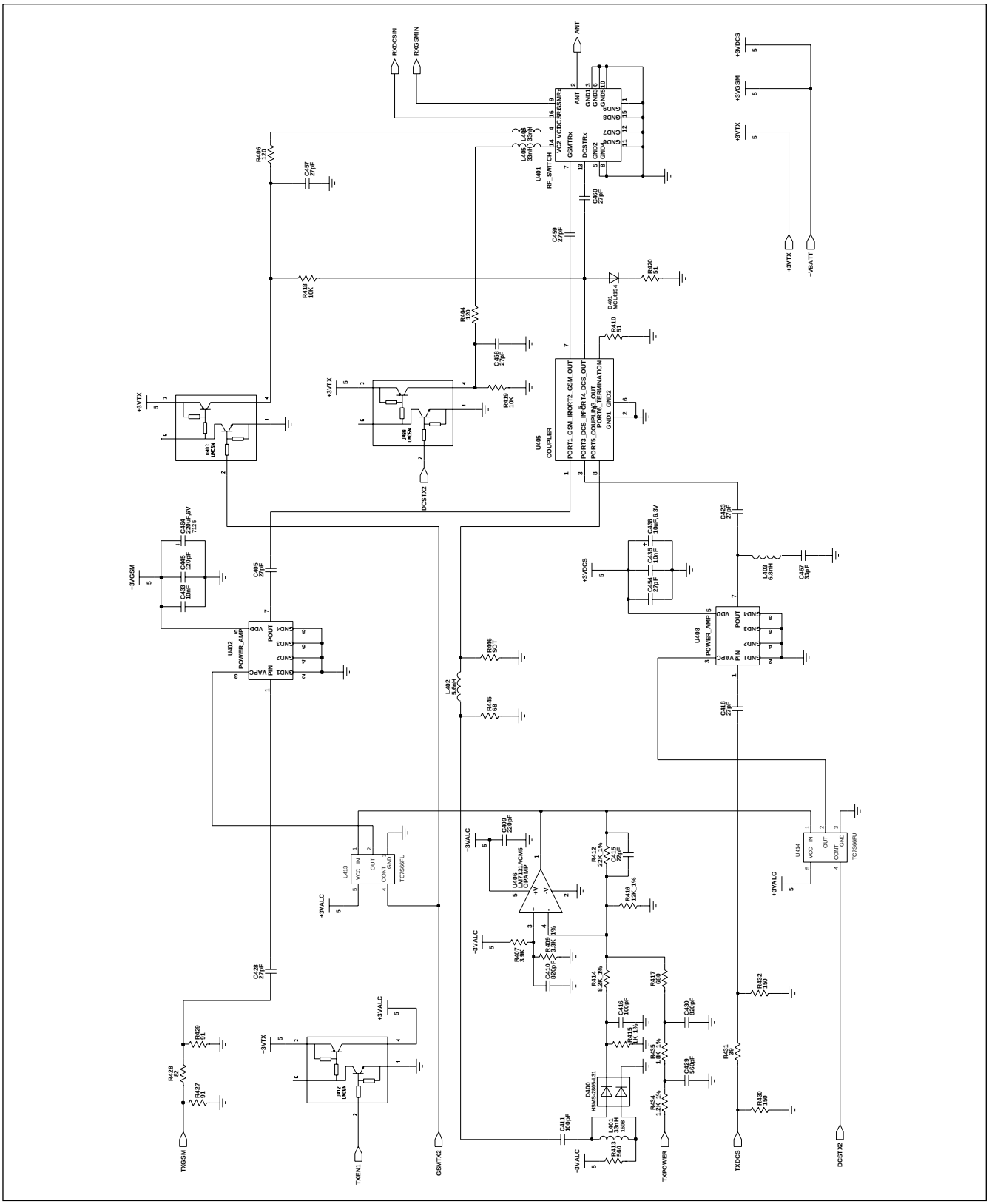

5-7 Base Band Block

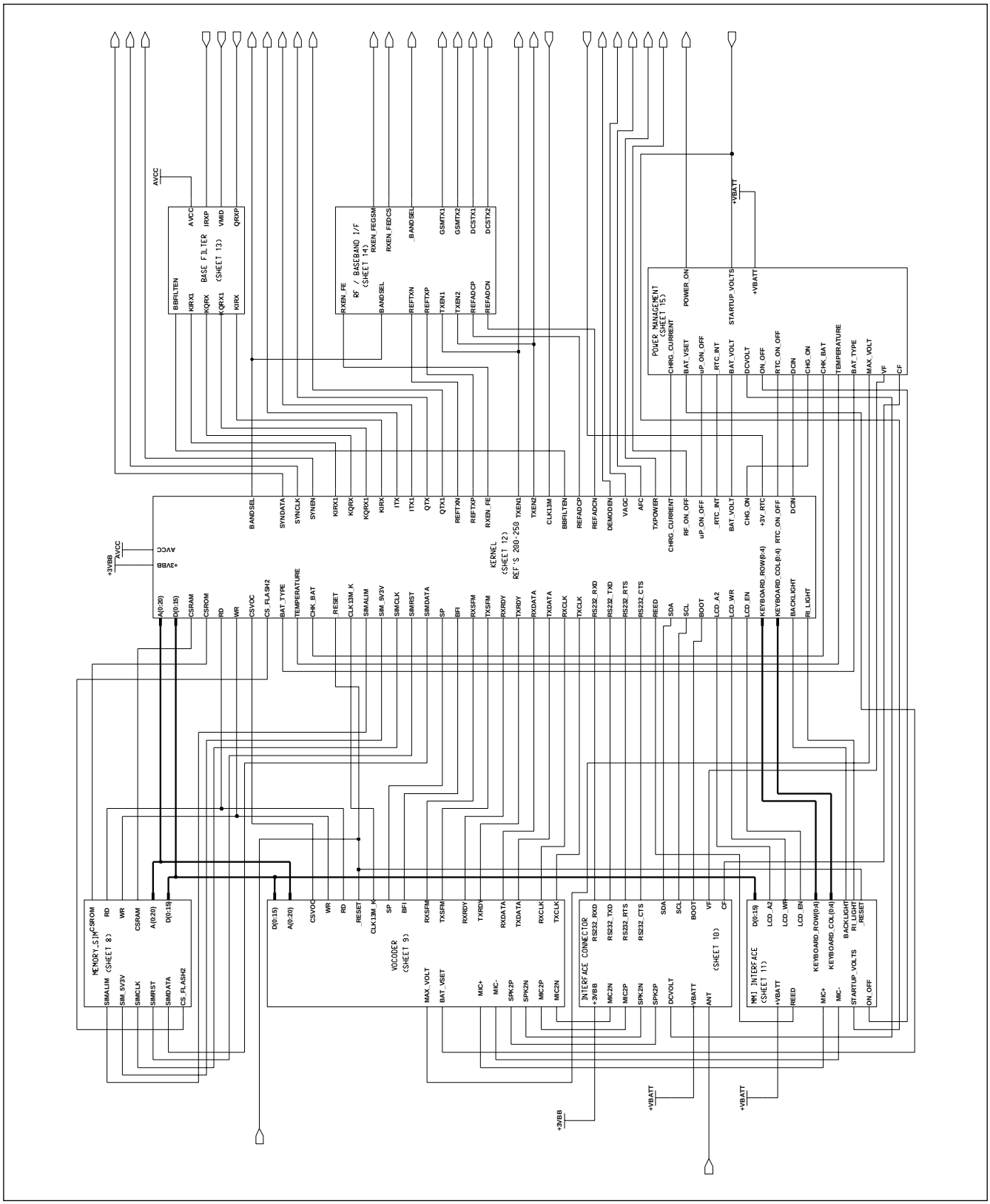

5-8 Memory & SIM Schematic

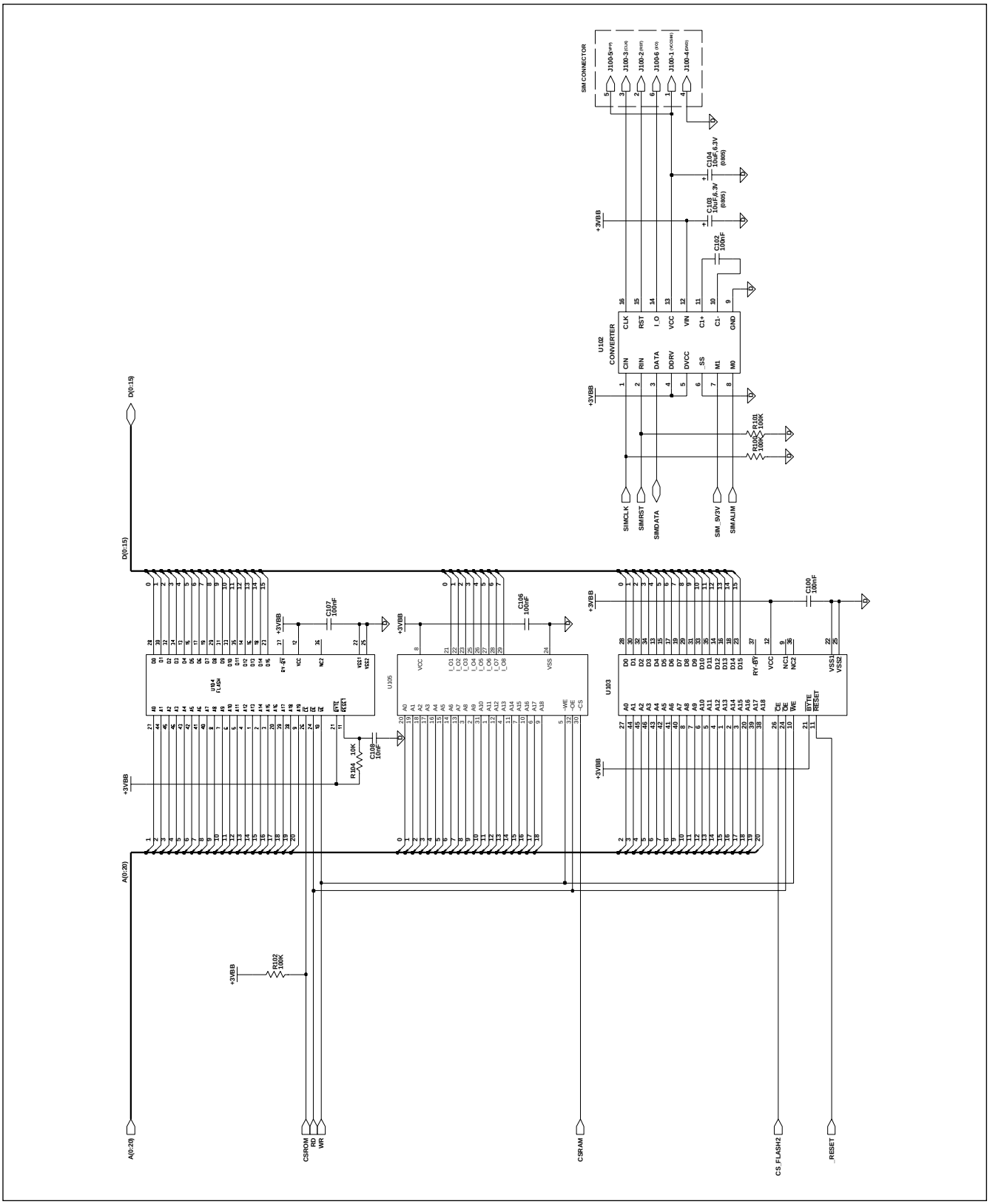

5-9 Vocoder

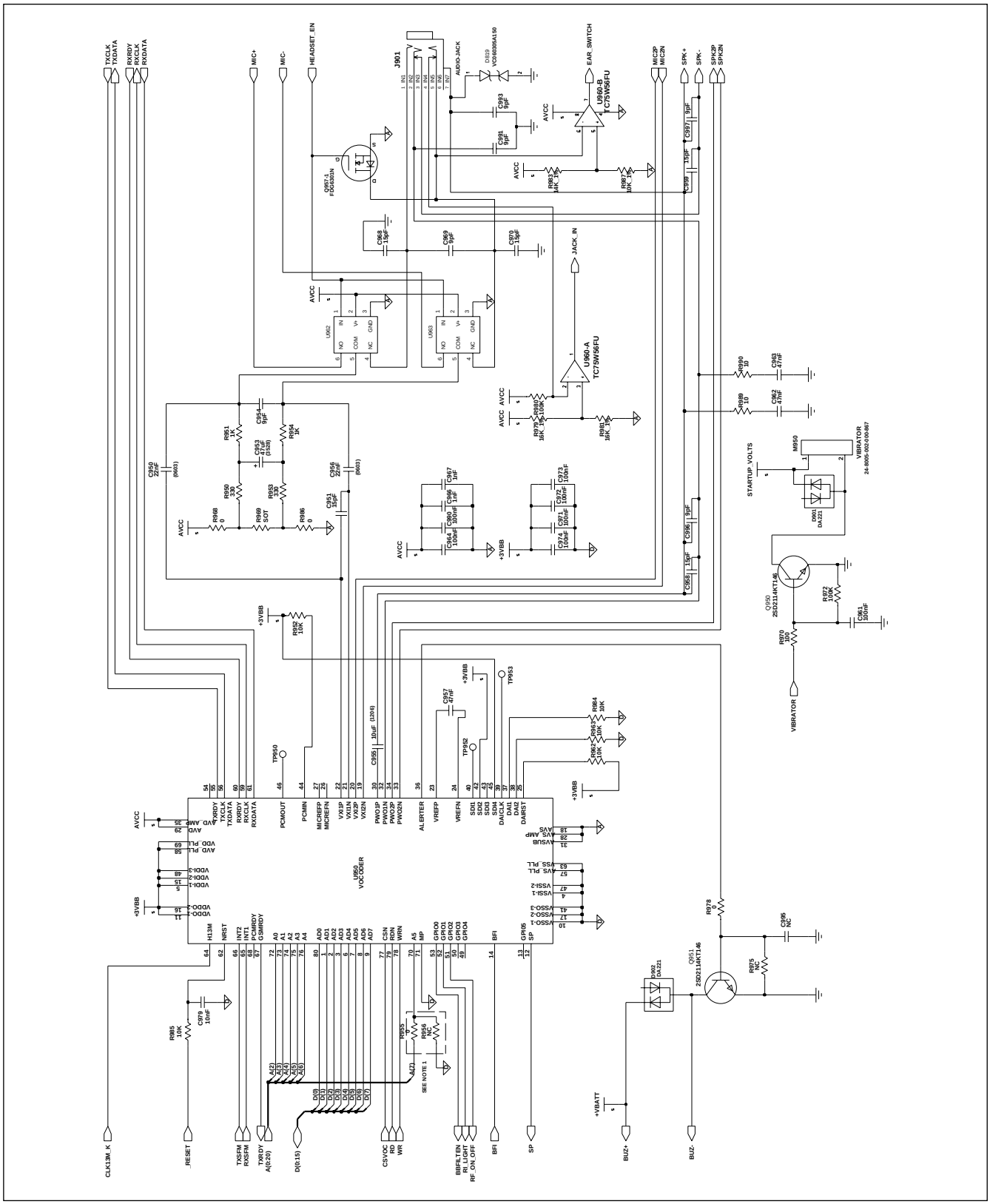
U950
VOCODER
J901
U960-B
TC75W56FU
U960-A
TC75W56FU
U962
U963
Q957.1
FDG6303N
Q950
2SD2114KT146
Q951
2SD2114KT146
D950
DA221
D952
DA221
M950
VIBRATOR
24-B005-002-000-987
TXCLK
TXDATA
RXRDY
RXCLK
RXDATA
MIC+
MIC-
HEADSET_EN
AUDIO-JACK
EAR_SWITCH
MIC2P
MIC2N
SPK+
SPK-
SPK2P
SPK2N
JACK_IN
STARTUP_VOLTS
VIBRATOR
CLK13M_K
_RESET
TXSFM
RXSFM
TXRDY
A(0:20)
D(0:15)
CSVOC
RD
WR
BBFILTER
RI_LIGHT
RF_ON_OFF
BFI
SP
BUZ+
BUZ-
+VBATT
AVCC
+3VBB
SEE NOTE 1

5-10 Interface Connector

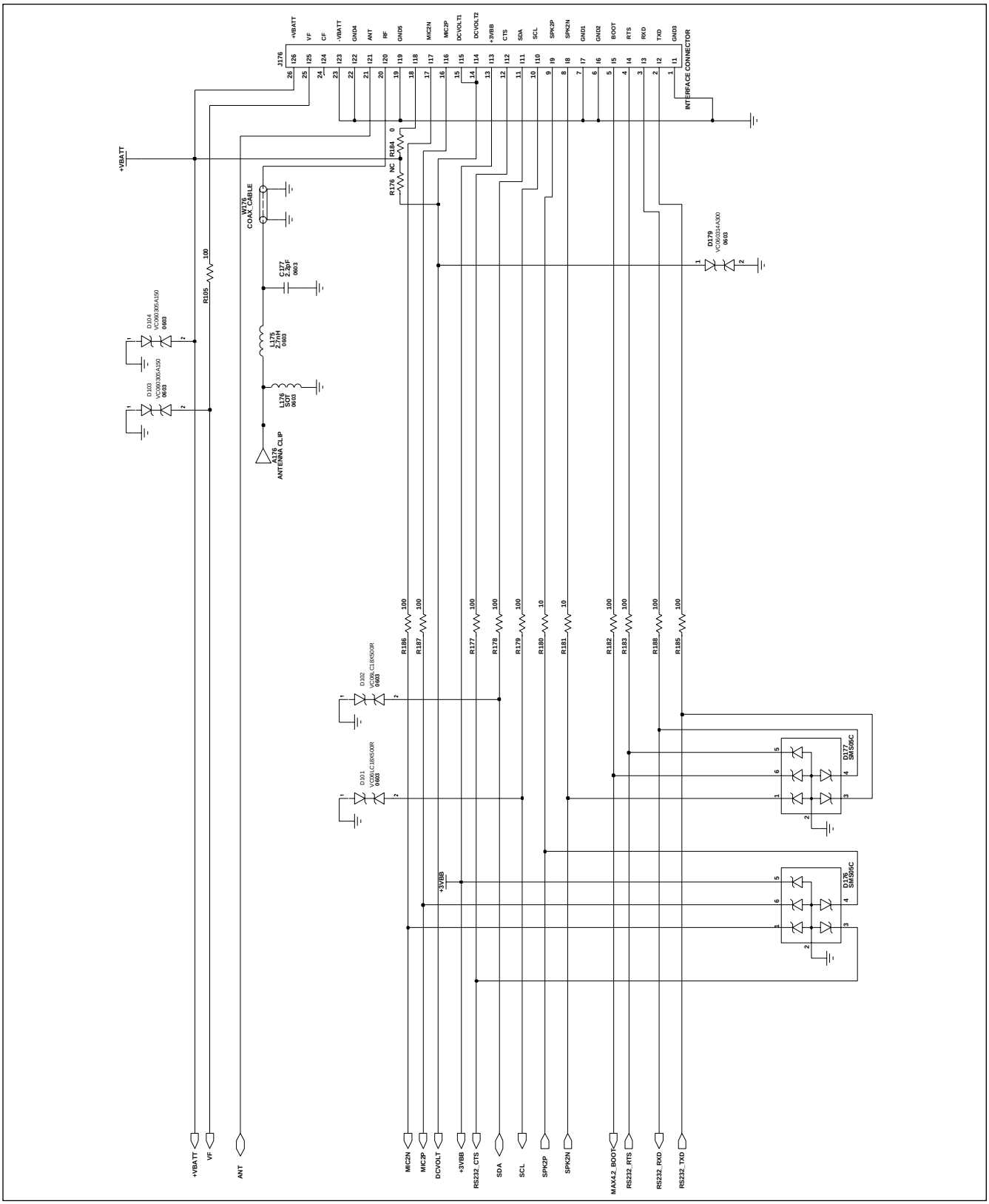

5-11 MMI Interface

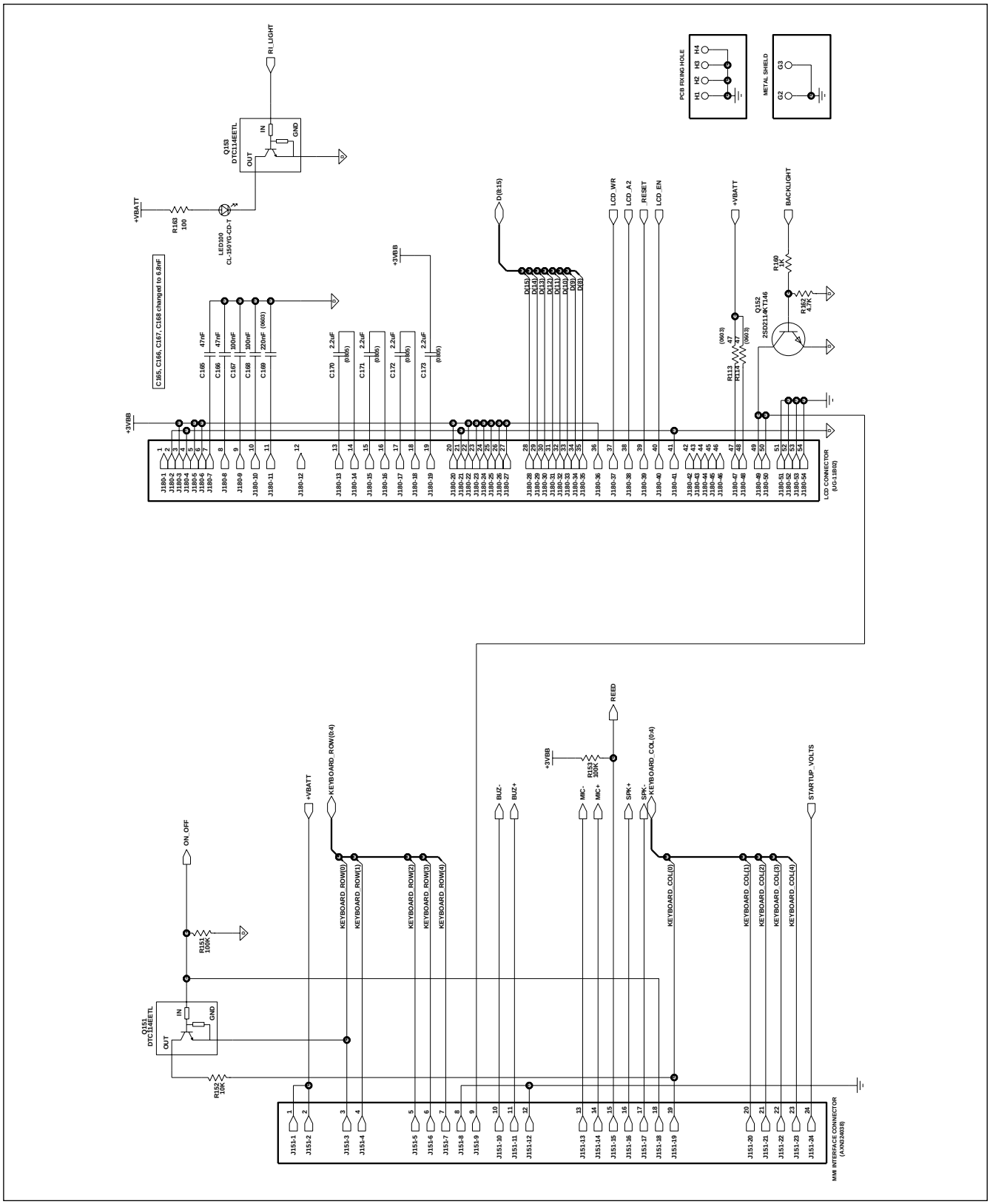

5-12 Kernel

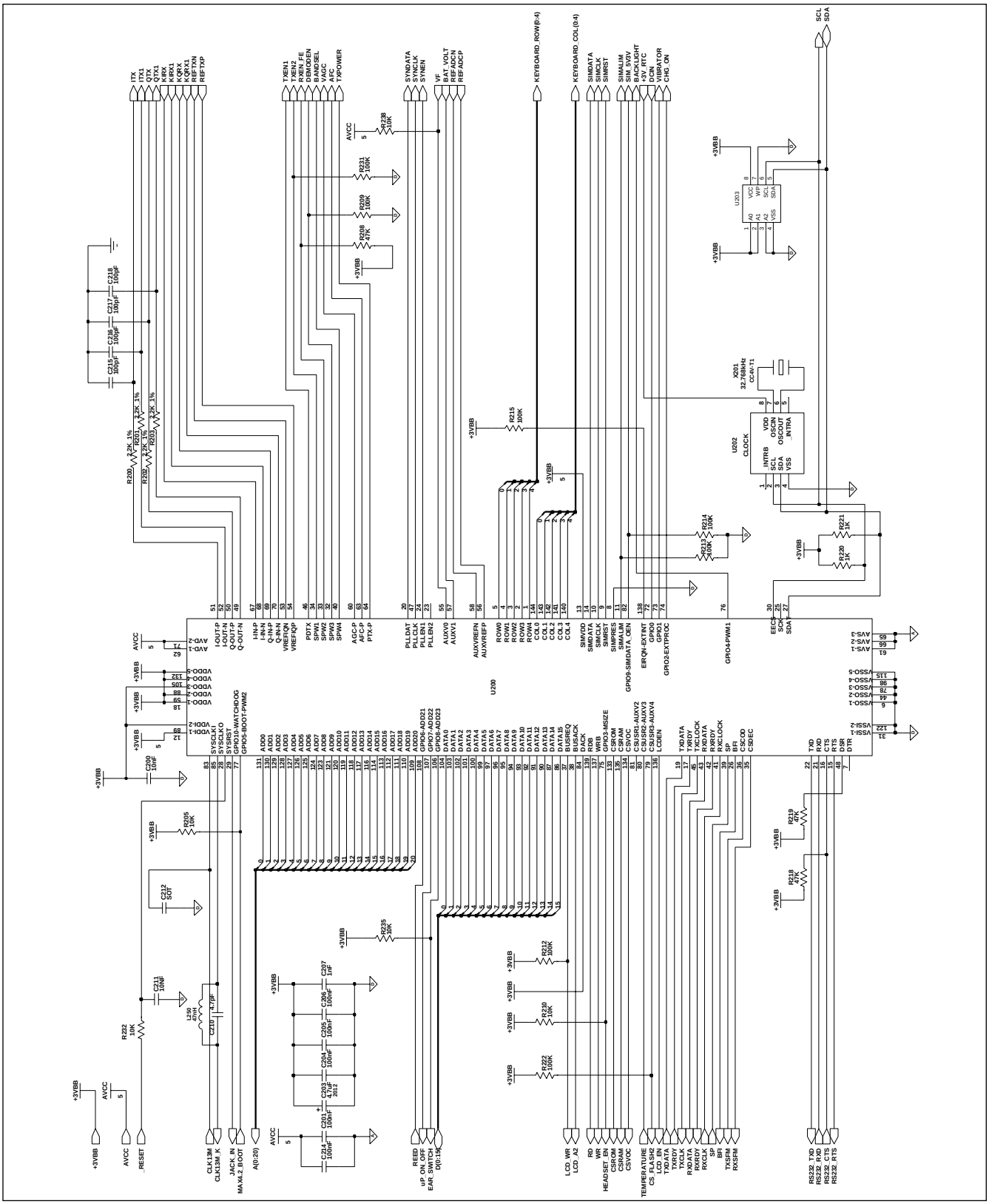
U200
U202
CLOCK
U203
X201
32.768kHz
CC4H-T1
ITX
QTX1
IRX
KQRX1
KQRX
KQRX1
RBFTXN
RBFTXP
TXEN1
TXEN2
RXEN_FE
DBMODEN
BANDSEL
VAGC
AFC
TXPOWER
SYNDATA
SYNCLK
SYNEN
VF
BAT_VOLT
RBFADCN
RBFADCP
KEYBOARD_ROW(0:4)
KEYBOARD_COL(0:4)
SIMDATA
SIMCLK
SIMRST
SIMALIM
SIM_5V
SIM_ACTLIGHT
+3V_RTC
DCIN
VIBRATOR
CHG_ON
SCL
SDA
AVCC
+3VBB
R238 10K
R231 100K
R209 100K
R208 47K
R200 2.2K 1%
R201 2.2K 1%
R202 2.2K 1%
R203 2.2K 1%
C215 100pF
C216 100pF
C217 100pF
C218 100pF
R215 100K
R214 100K
R213 100K
R221 1K
R220 1K
R205 10K
C212 5.0F
C200 10nF
C211 10nF
R232 10K
L200 47nH
C210 4.7pF
C201 100nF
C202 4.7uF 20%
C203 100nF
C204 100nF
C205 100nF
C206 100nF
C207 1nF
R235 10K
R212 100K
R210 10K
R222 100K
R219 47K
R218 47K
CLK13M
CLK13M_K
JACK_IN
MAX4.2_BOOT
A(0:20)
REED
UP_ON_OFF
EAR_SWITCH
D(0:15)
LCD_WR
LCD_A2
RD
WR
HEADSET_INT
CSROM
CSRAM
CSVOC
TEMPERATURE
CS_FLASH2
LCD_EN
TXDATA
TXRDY
TXCLK
RXDATA
RXRDY
RXCLK
SP
BFI
TXSFM
RXSFM
RS232_TXD
RS232_RXD
RS232_CTS
RS232_RTS
RESET

5-13 Baseband Filters

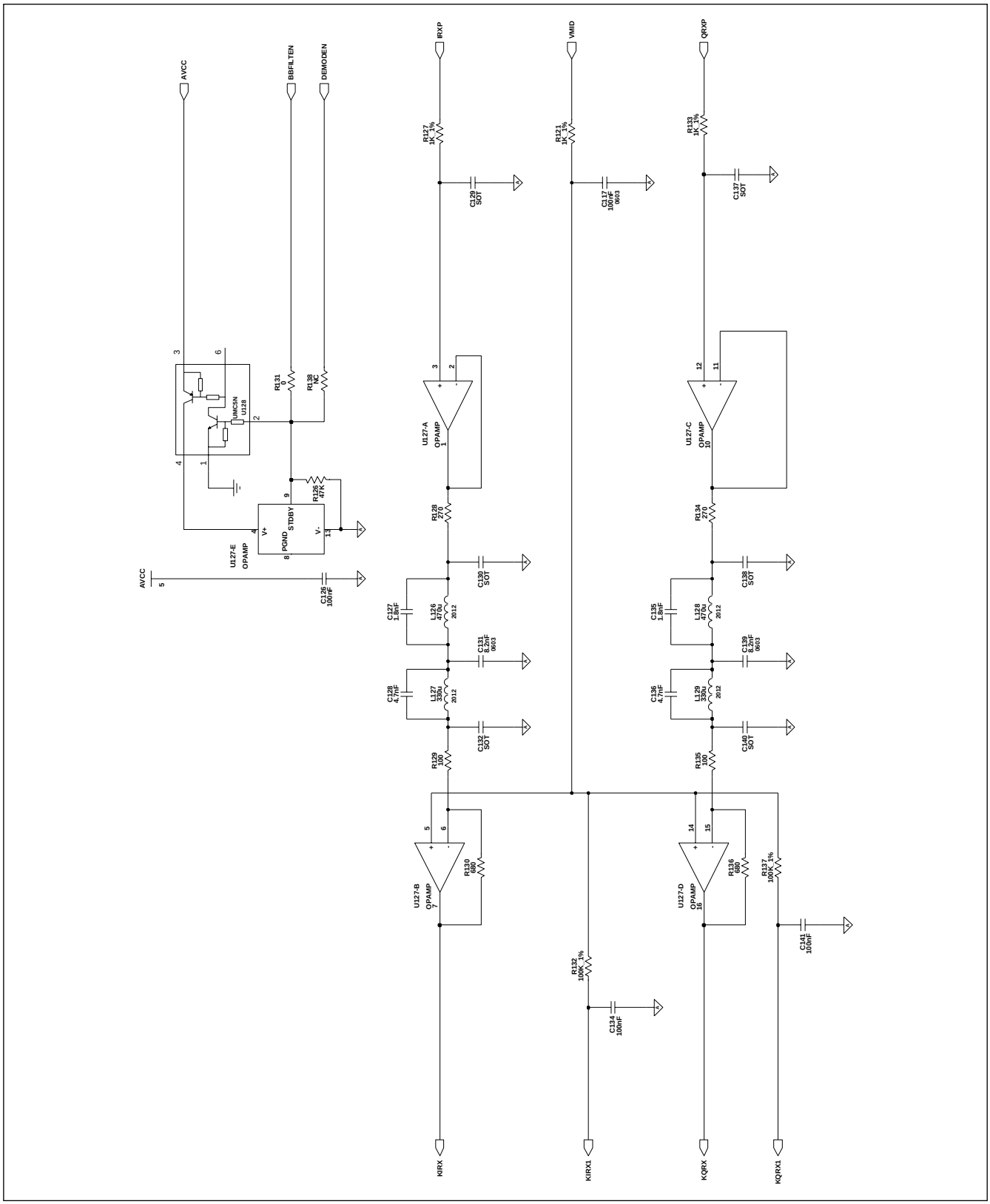

5-14 Control Logics

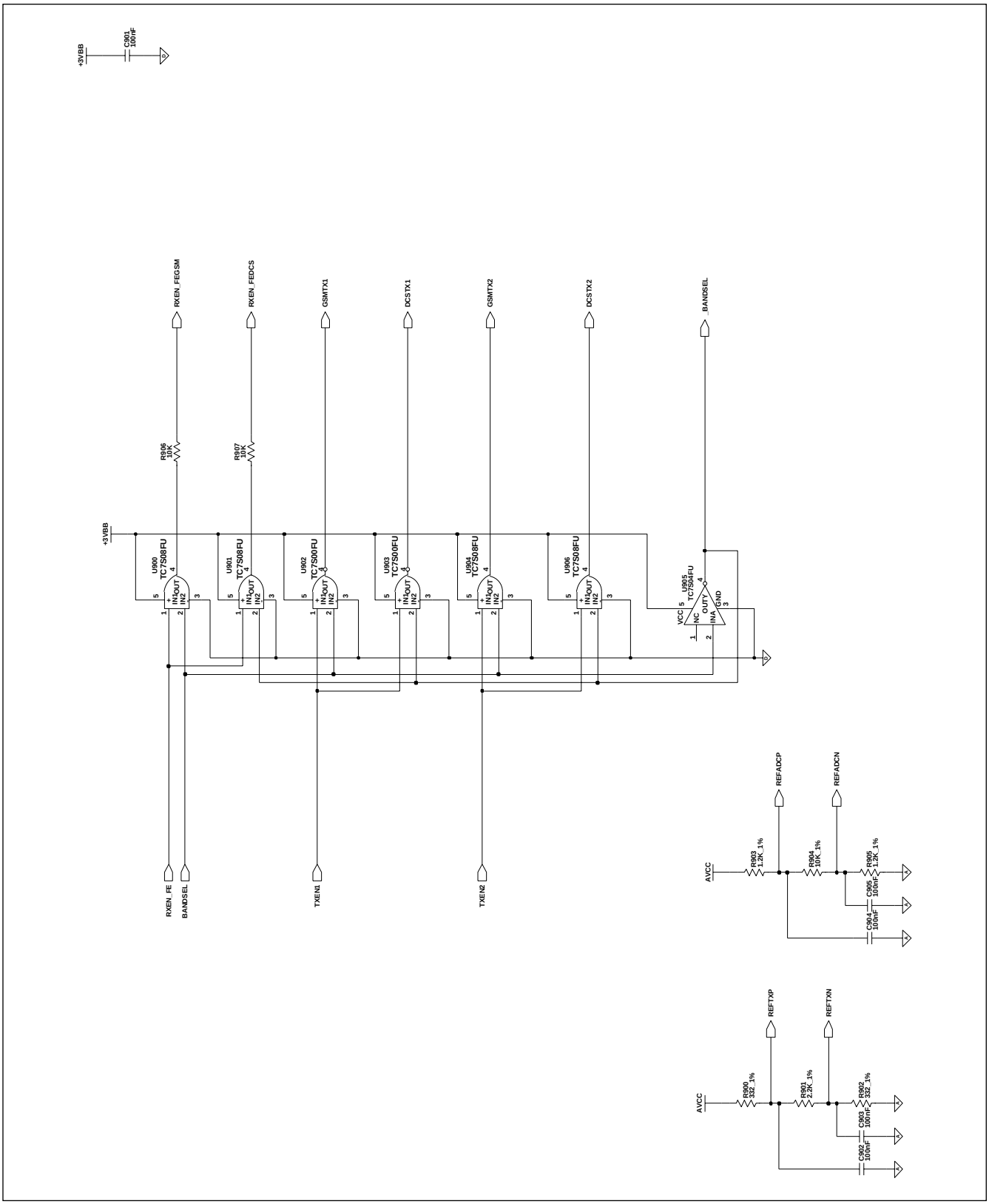

5-15 Power Management

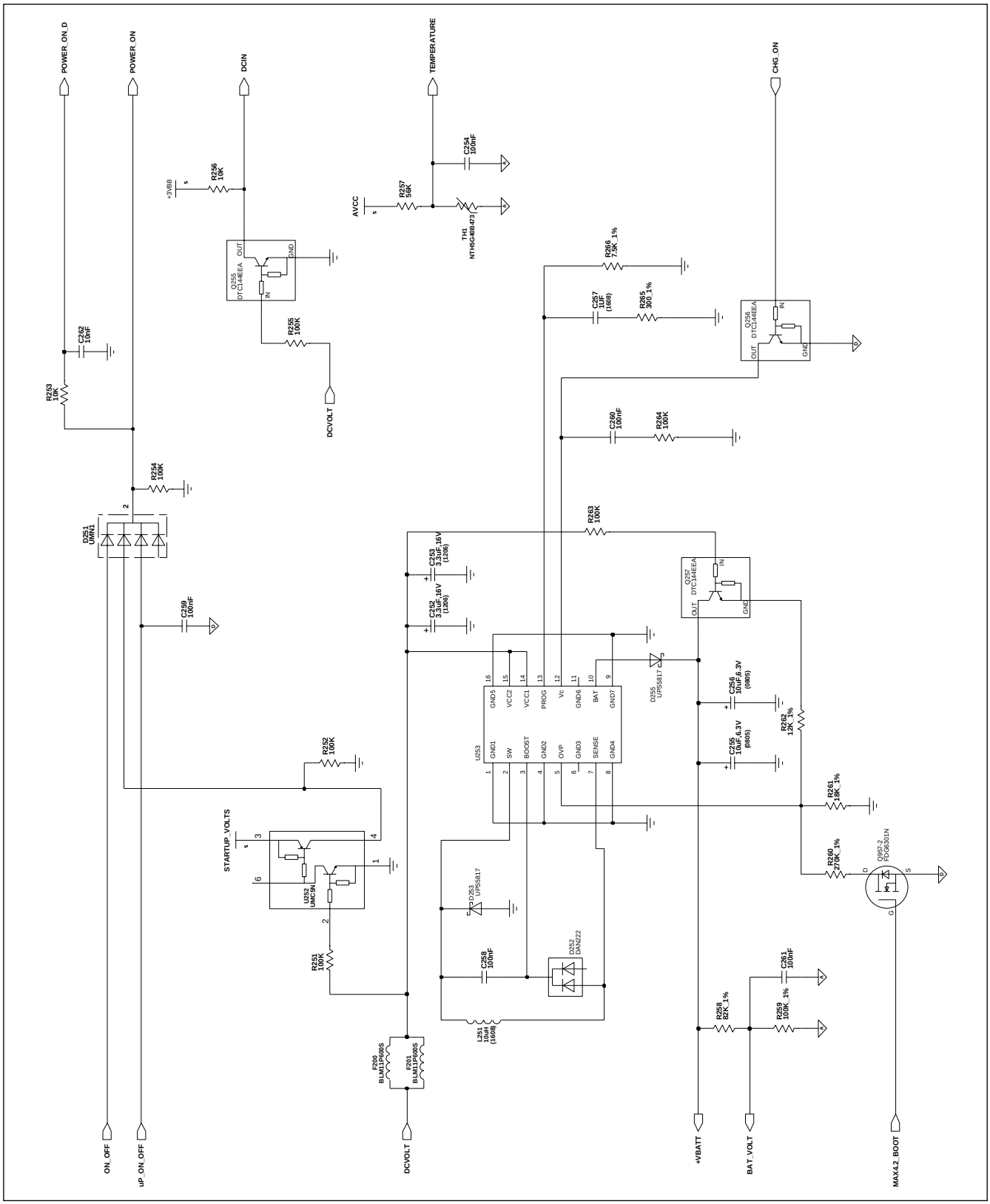
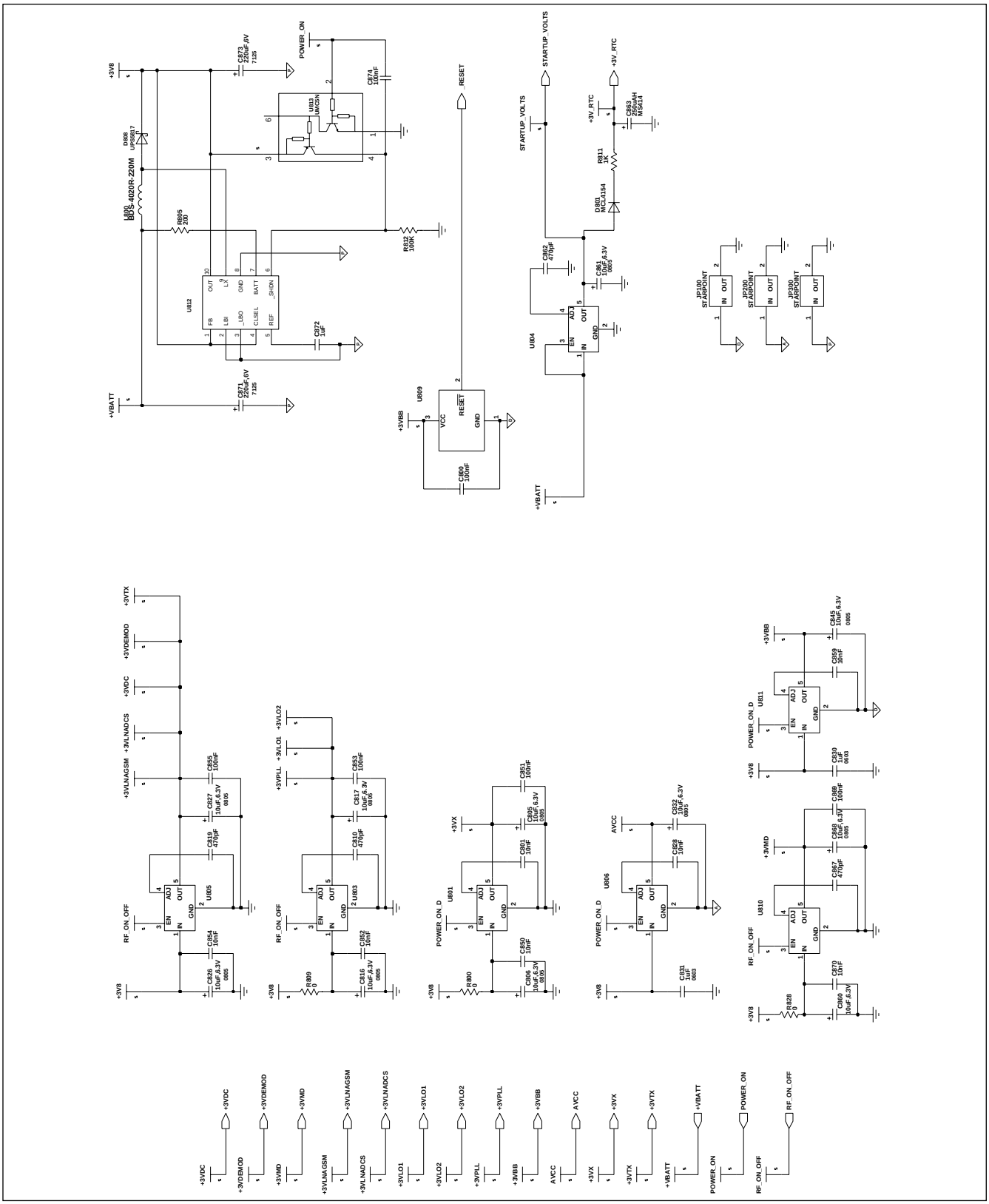
5-16 Power Supply Units